TECHNICAL FEATURES :

Max speed : 1800 rpm
Max torque : 400Nm
Radial force: 150Kg
Feed : 1~500mm/min
Max workable ∅:250mm

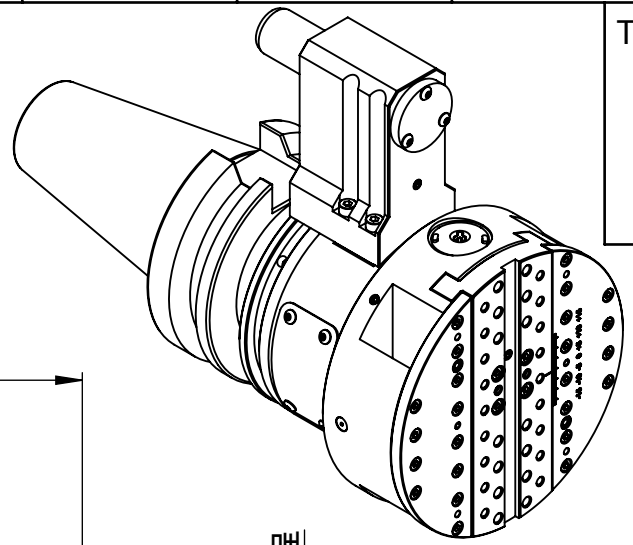

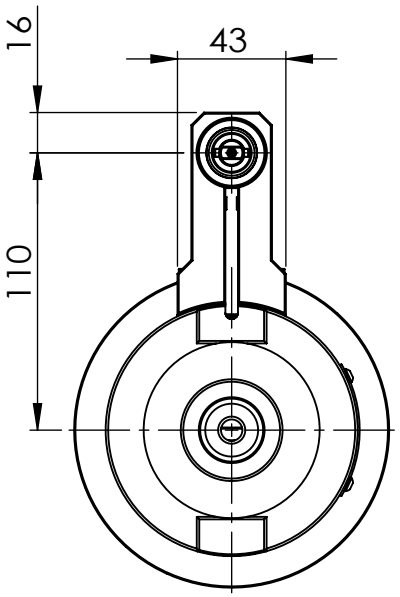

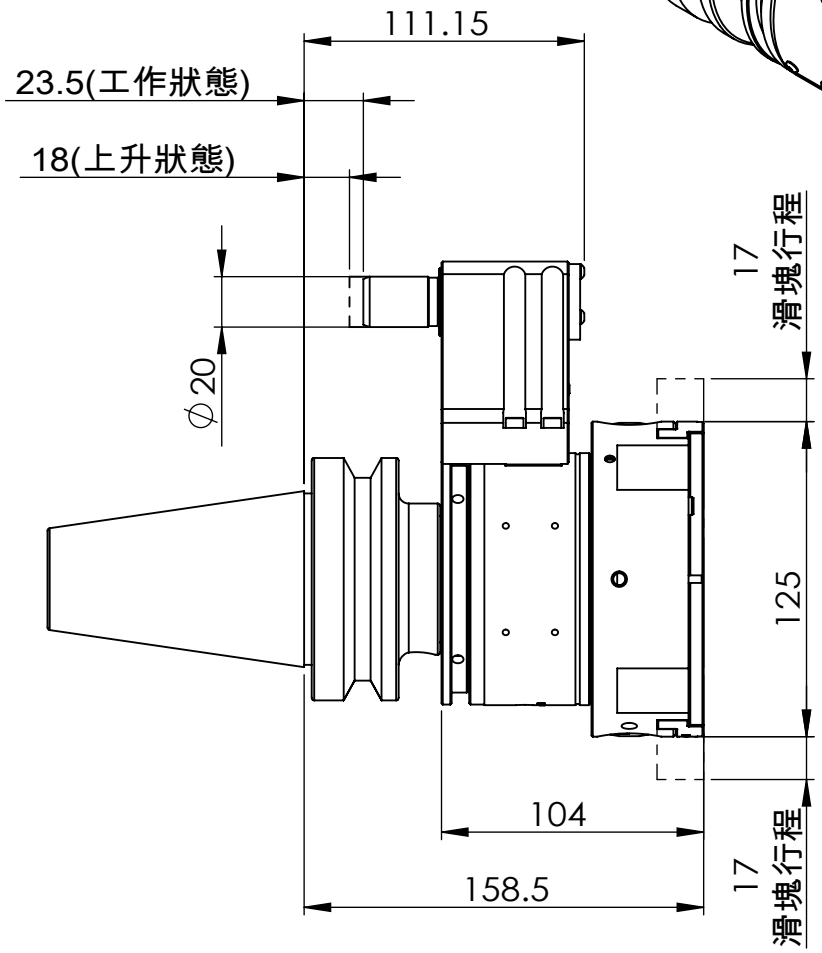

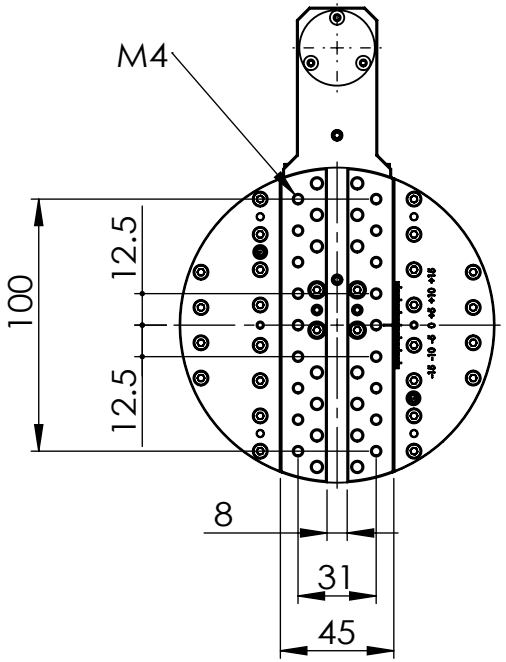

Machine type :
BT50
10.6Kg

豪力輝工業股份有限公司
HOLD WELL INDUSTRIAL CO.,LTD
E-mail : sales@mail.holdwell.com
http ://www.holdwell.com

品號 Model No.	BHA-BT50-125	R-01
品名 Description	U軸搪削頭-BT50-125型 Boring and facing head-A type	