TECHNICAL FEATURES :

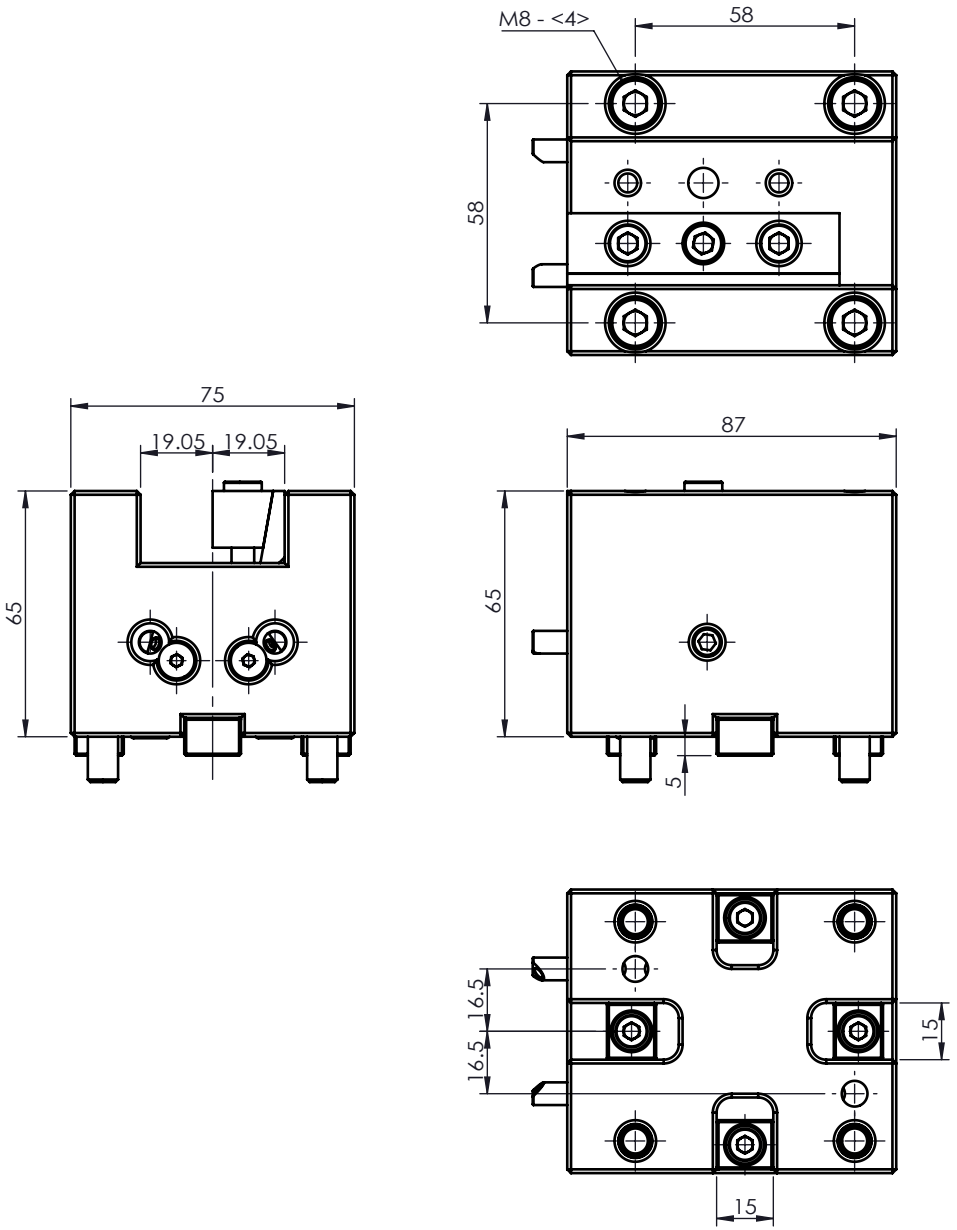

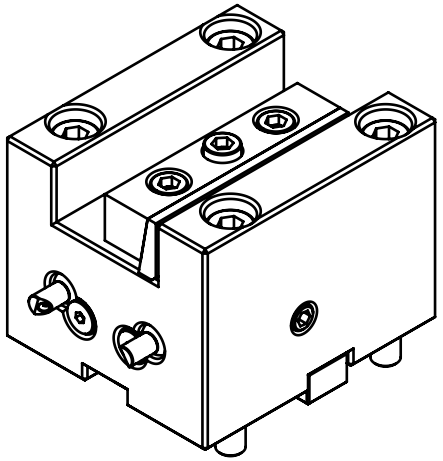

Machine type :
LYNX 220 M/LM/LMS/LY/LSY
LYNX 2100 M/LM/LMS/LY/LSY
PUMA MX1600 16ST
PUMA TT1300SY/SYY

豪力輝工業股份有限公司
HOLD WELL INDUSTRIAL CO.,LTD
E-mail：sales@mail.holdwell.com
http ://www.holdwell.com

品號 Model No.	THL-DLN-B1-4519.05	R-04
品名 Description	BMT45-W19.05 單刃端面內徑刀座 B1 BMT45-W19.05 Face and ID Tool Holder B1	