TECHNICAL FEATURES :

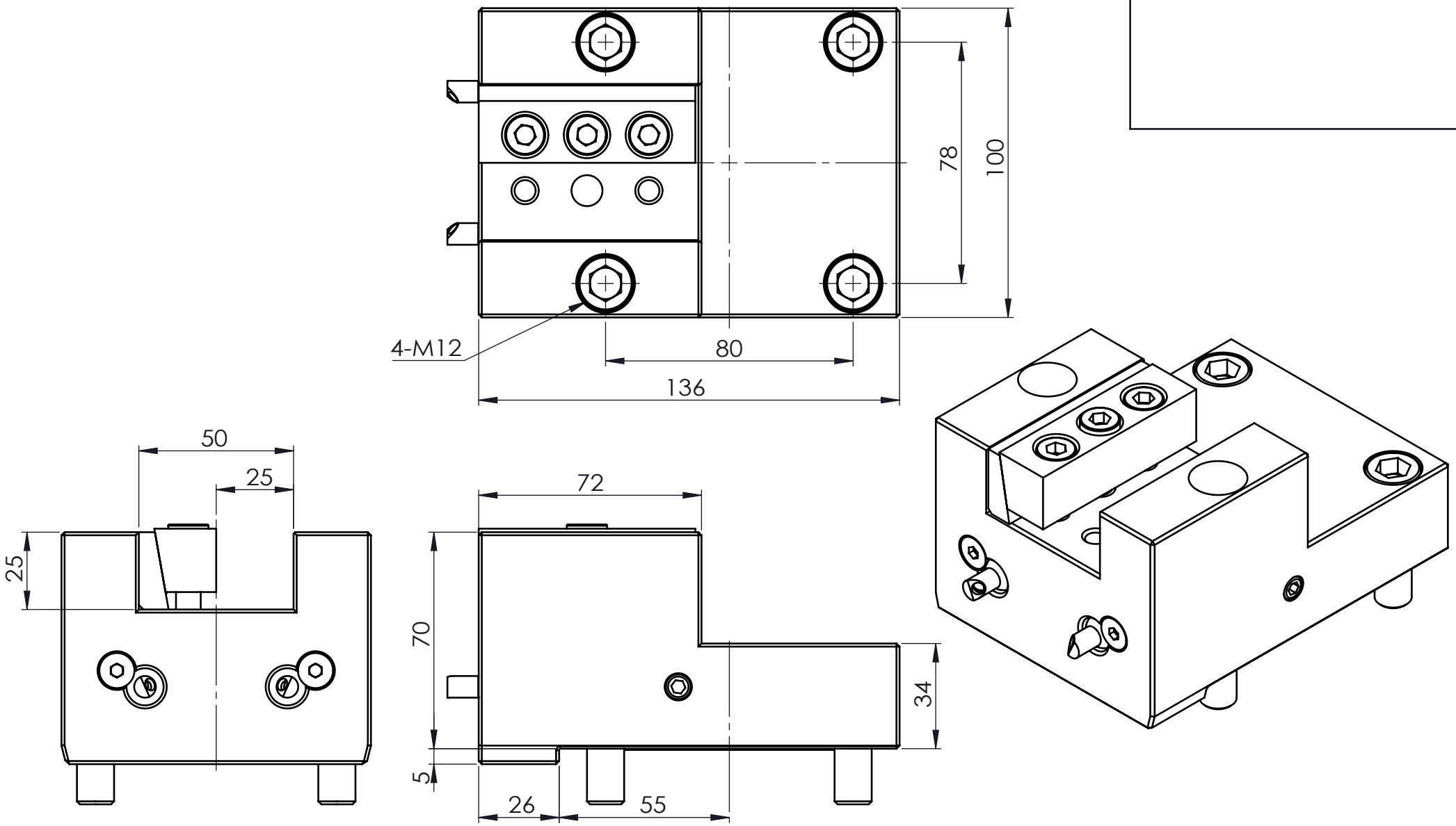

Machine type :
LB4000EX

豪力輝工業股份有限公司
HOLD WELL INDUSTRIAL CO.,LTD
E-mail : sales@mail.holdwell.com
http ://www.holdwell.com

品號 Model No.	THL-KB4-B1-6025
品名 Description	Okuma60-W25端面刀座B1 Okuma60-W25 Face and ID Tool Holder B1